ANSI Z359.18 Type A	OSHA 1926.502 OSHA 1910.140

FIXED BEAM ANCHOR

Anchorage Connector

USER INSTRUCTION MANUAL 5909098 Rev. H

Fall Protection

1							
				A	B	OSHA 1926.502 / 1910.140	ANSI Z359.18 Type A
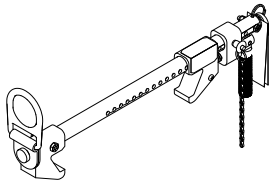	**2108406**	2.5 in x 4 in x 20 in	5.2 lbs	2.5 in - 12 in	≤ 1.5 in	√	√
	2108407	2.5 in x 4 in x 26 in	5.9 lbs	2.5 in - 18 in	≤ 1.5 in	√	√
	2108408	2.5 in x 4 in x 32 in	6.7 lbs	2.5 in - 24 in	≤ 1.5 in	√	√
	2108410	2.5 in x 5 in x 45 in	9.1 lbs	12 in - 36 in	1.5 - 2.5 in	√	

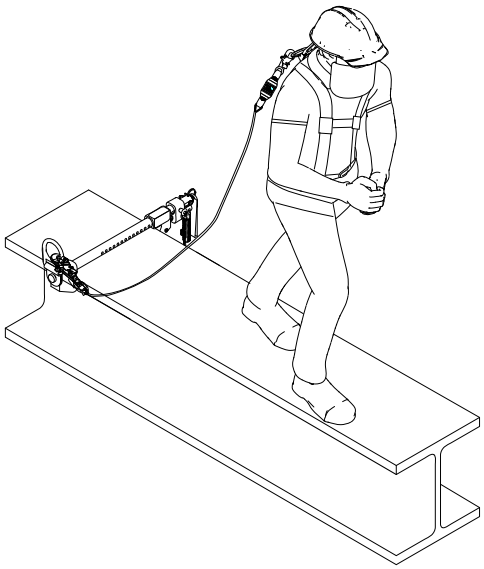

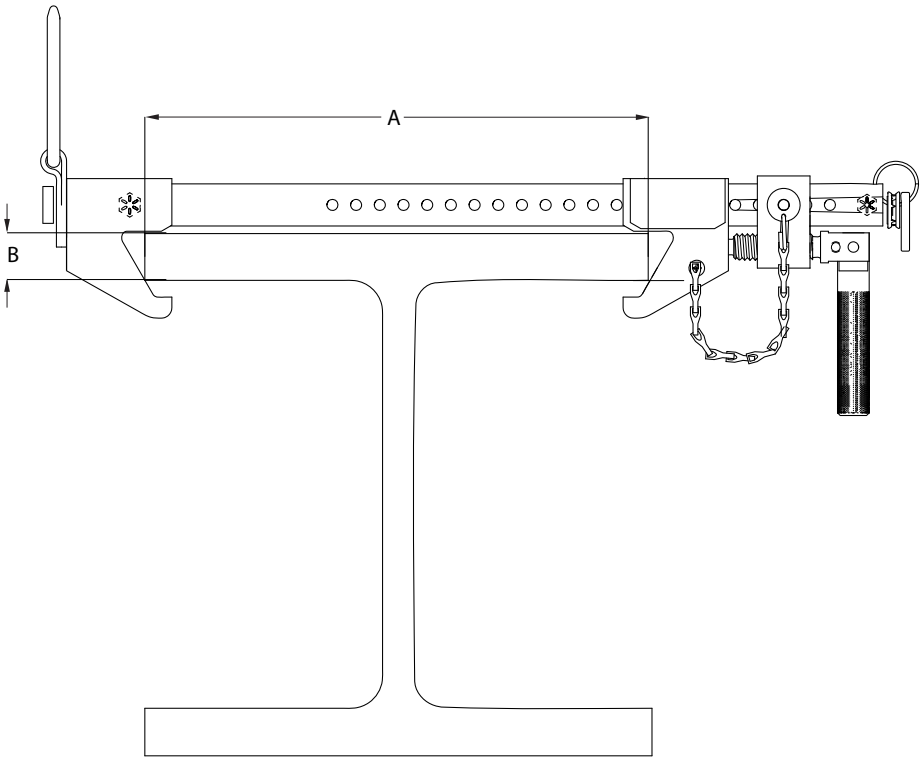

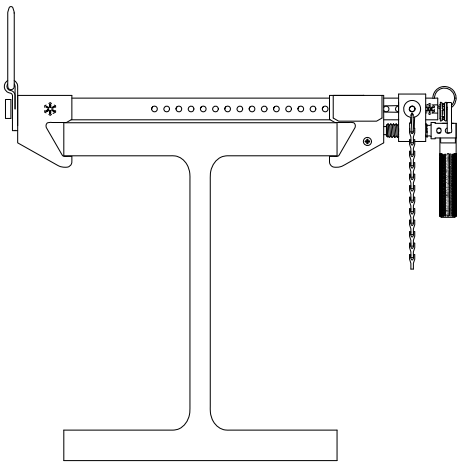

2

2108406-2108408, 2108410

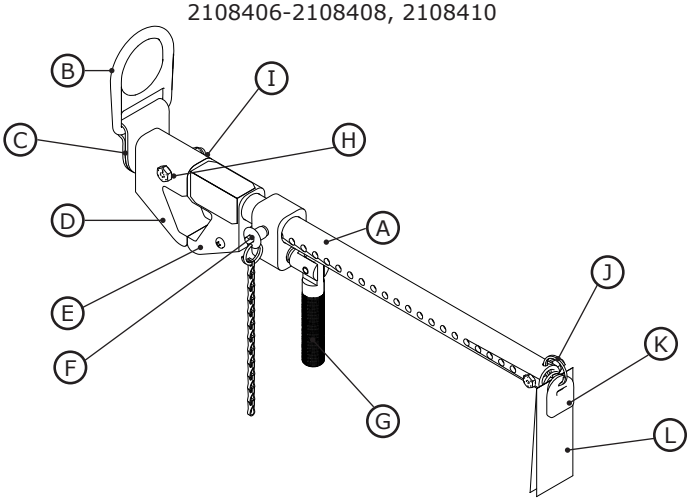

3

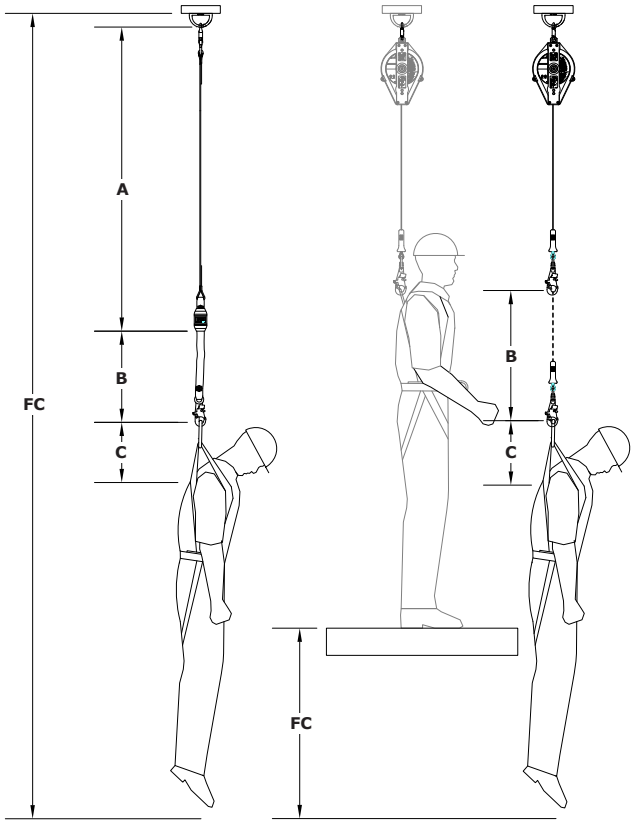

4

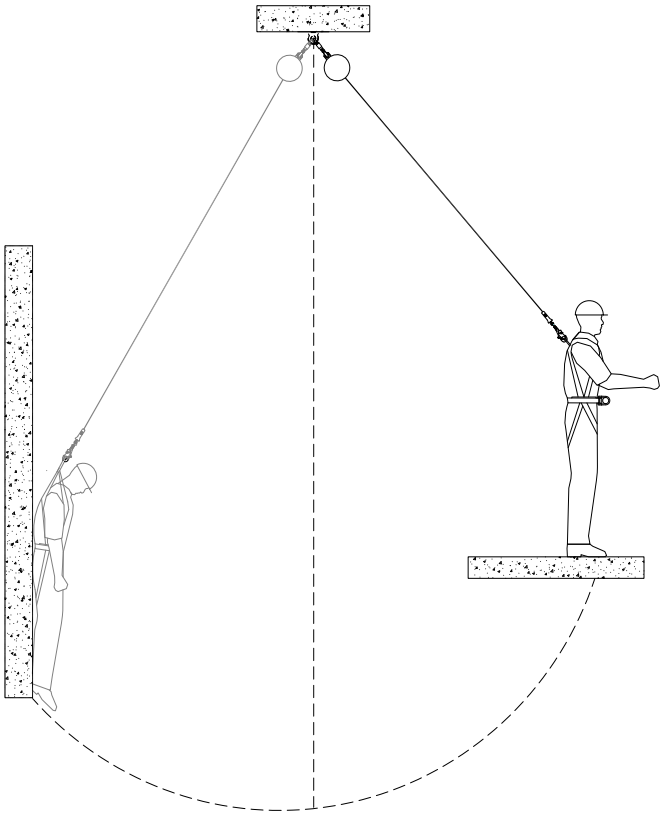

5

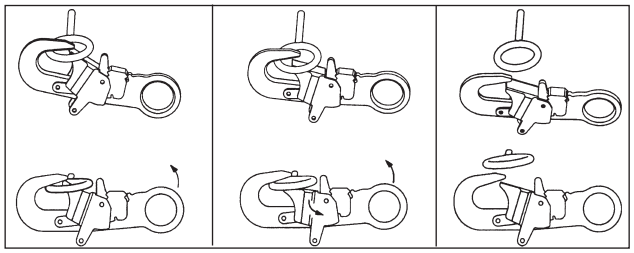

A B C

6

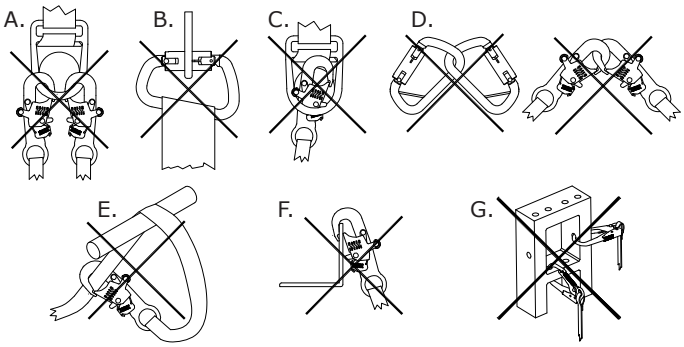

7

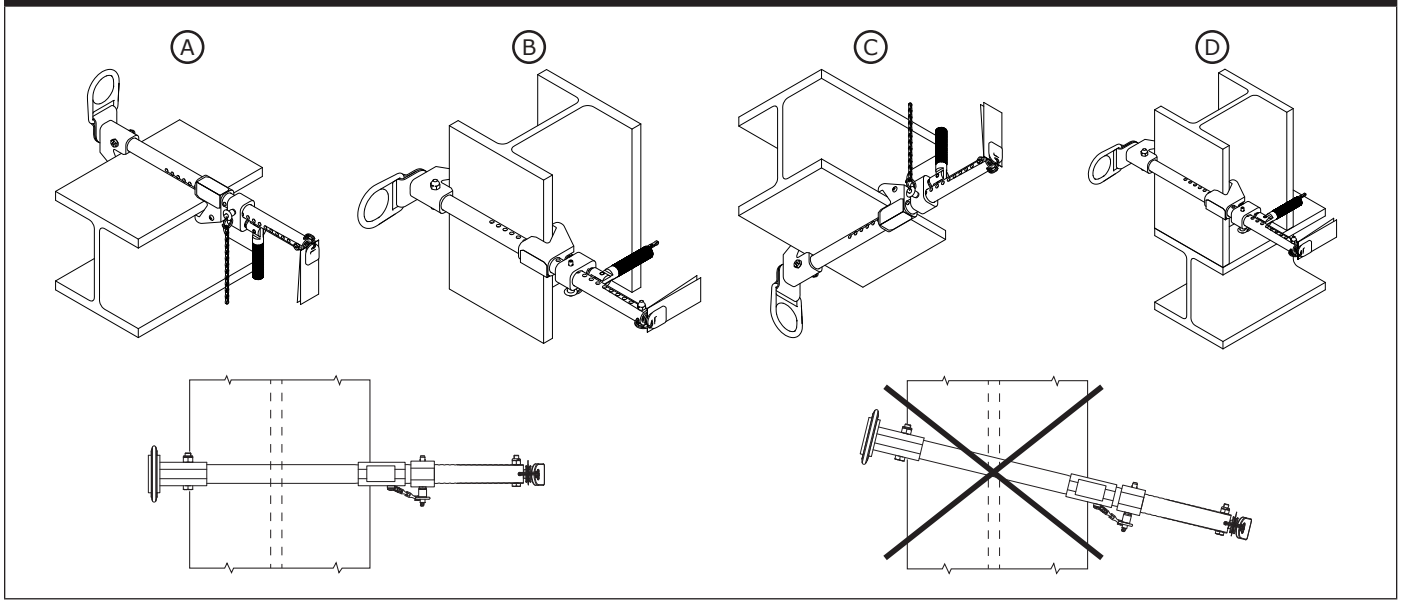

8

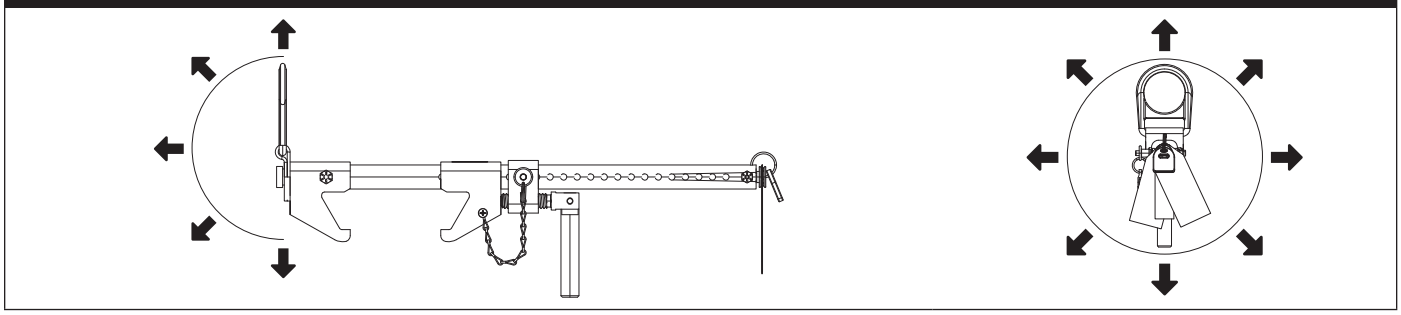

9

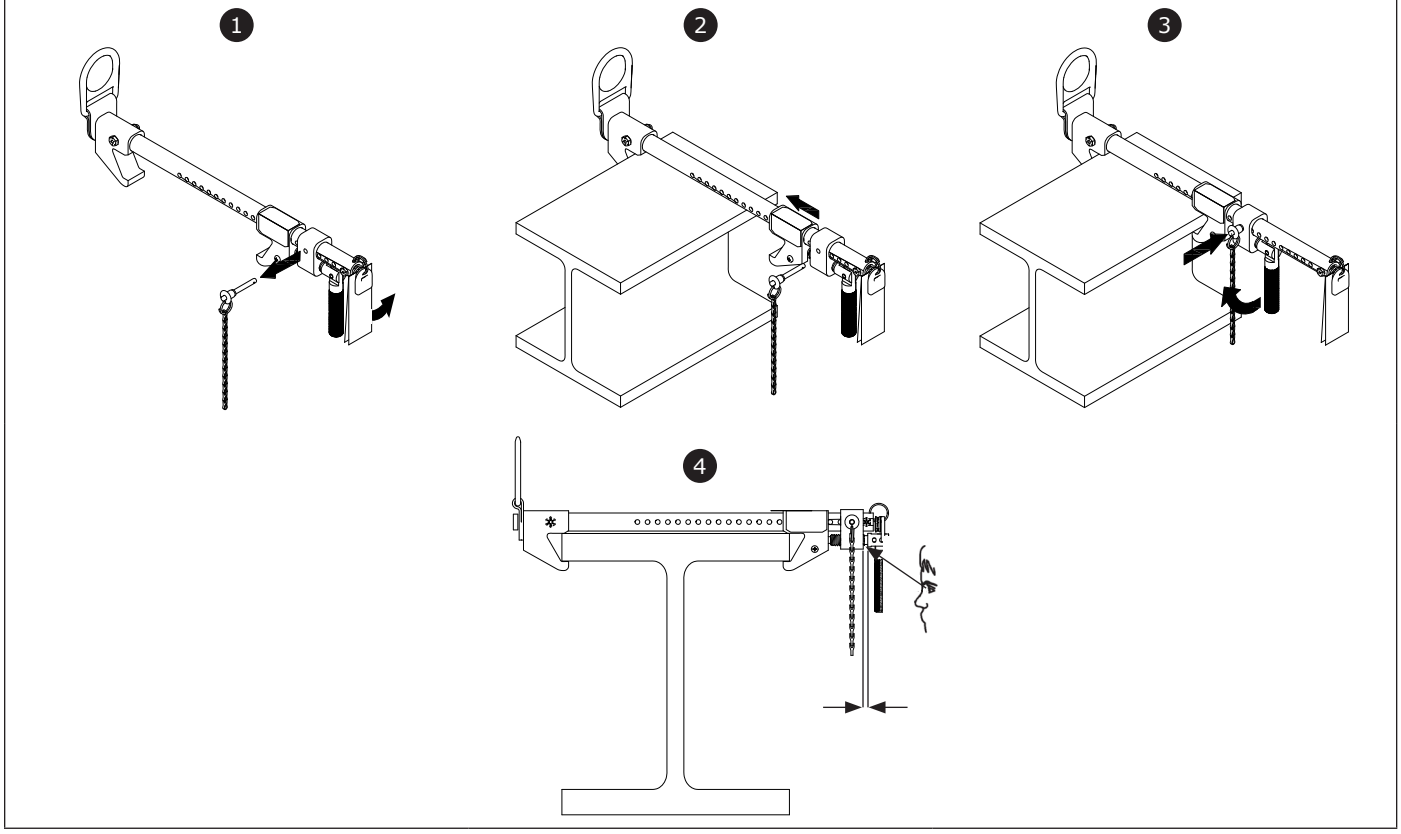

10

11

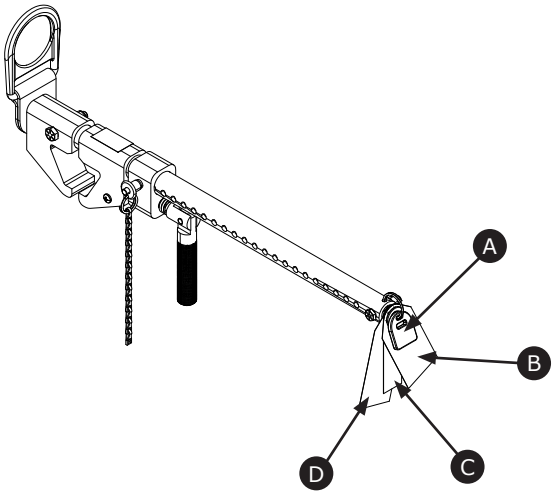

A

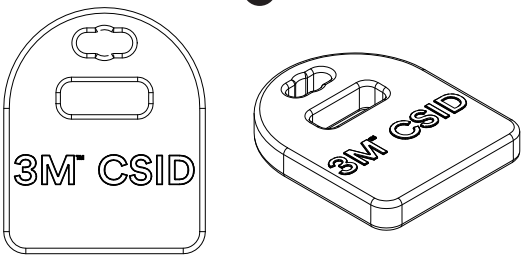

C

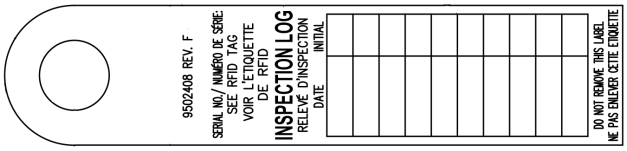

B

3M | DBI SALA® Fall Protection

INSPECTION: Inspect anchor before each use. Do not use if inspection reveals an unsafe or defective condition. Do not remove this label.

FIXED BEAM ANCHOR

This product complies with standards as marked below:
A = ANSI Z359.1
B = ANSI Z359.18 Type A
C = OSHA 1925.502 & 1910.140

MFRD(YR/MO)/**LOT:** **MODEL NO:** **STD:**

9503309 Rev. C

SPECIFICATIONS: Minimum breaking strength is 5000 lbs. Maximum capacity is one person with a maximum weight of 310 pounds ANSI, 420 pounds OSHA when used as a single point anchorage connector for a personal fall arrest or restraint system. Do not exceed capacity of this or other system components. Materials of construction: D-ring, support tube, and fasteners - zinc plated steel and alloy steel; hook ends, adjustment block and handle - high strength aluminum; d-ring bracket and locking detent pin - stainless steel. ANSI Minimum service temp: - 40°F (- 40°C). The flange sizes suitable for mounting this device are specified below.

Model No.	Flange Thickness	Flange Width
2108406	up to 1 1/2"	2 1/2" to 12"
2108407	up to 1 1/2"	2 1/2" to 18"
2108408	up to 1 1/2"	2 1/2" to 24"
2108410	1/2" to 2 1/2"	12" to 36"
2108417	1 1/2" to 3"	36" to 60"

D

⚠ WARNING

Manufacturer's instructions supplied with this product at time of shipment must be followed for proper use, maintenance, and inspection. Use only with ANSI/OSHA approved personal fall arrest or restraint systems. Ensure fixed beam anchor is adjusted tightly on beam flange. Make only compatible connections. Alteration or misuse of this product, or failure to follow instructions may result in serious injury or death. Items subject to fall arrest or impact forces must be immediately removed from service and destroyed. Do not remove this label.

9503307 Rev. B

3M | DBI SALA® Fall Protection

Fixed Beam Anchor

3M.com/FallProtection

SAFETY INFORMATION

Please read, understand, and follow all safety information contained in these instructions prior to the use of this Anchorage Connector. FAILURE TO DO SO COULD RESULT IN SERIOUS INJURY OR DEATH.

These instructions must be provided to the user of this equipment. Retain these instructions for future reference.

Intended Use:

This Anchorage Connector is intended for use as part of a complete personal fall protection system.

Use in any other application including, but not limited to, material handling, recreational or sports related activities, or other activities not described in the User Instructions, is not approved by 3M and could result in serious injury or death.

This device is only to be used by trained users in workplace applications.

⚠ WARNING

This Anchorage Connector is part of a personal fall protection system. It is expected that all users be fully trained in the safe installation and operation of their personal fall protection system. **Misuse of this device could result in serious injury or death.** For proper selection, operation, installation, maintenance, and service, refer to these User Instructions and all manufacturer recommendations, see your supervisor, or contact 3M Technical Service.

- **To reduce the risks associated with working with an Anchorage Connector which, if not avoided, could result in serious injury or death:**
  - Inspect the device before each use, at least annually, and after any fall event. Inspect in accordance with the User Instructions.
  - If inspection reveals an unsafe or defective condition, remove the device from service and repair or replace according to the User Instructions.
  - Any device that has been subject to fall arrest or impact force must be immediately removed from service and destroyed.
  - The device must only be installed in the specified substrates or on structures detailed in the User Instructions. Installations and use outside the scope of this instruction must be approved by 3M Fall Protection.
  - The substrate or structure to which the anchorage connector is attached must be able to sustain the static loads specified for the anchor in the orientations permitted in the User Instructions.
  - Only connect other fall protection subsystems to the designated anchorage connection point on the device.
  - Prior to drilling or fastening, ensure no electric lines, gas lines, or other critical embedded systems will be contacted by the drill or the device.
  - Ensure that fall protection systems/subsystems assembled from components made by different manufacturers are compatible and meet the requirements of applicable standards, including the ANSI Z359 or other applicable fall protection codes, standards, or requirements. Always consult a Competent or Qualified Person before using these systems.

- **To reduce the risks associated with working at height which, if not avoided, could result in serious injury or death:**
  - Ensure your health and physical condition allow you to safely withstand all of the forces associated with working at height. Consult with your doctor if you have any questions regarding your ability to use this equipment.
  - Never exceed allowable capacity of your fall protection equipment.
  - Never exceed maximum free fall distance of your fall protection equipment.
  - Do not use any fall protection equipment that fails pre-use or other scheduled inspections, or if you have concerns about the use or suitability of the equipment for your application. Contact 3M Technical Services with any questions.
  - Some subsystem and component combinations may interfere with the operation of this equipment. Only use compatible connections. Consult 3M prior to using this equipment in combination with components or subsystems other than those described in the User Instructions.
  - Use extra precautions when working around moving machinery (e.g. top drive of oil rigs) electrical hazards, extreme temperatures, chemical hazards, explosive or toxic gases, sharp edges, or below overhead materials that could fall onto you or your fall protection equipment.
  - Use Arc Flash or Hot Works devices when working in high heat environments.
  - Avoid surfaces and objects that can damage the user or equipment.
  - Ensure there is adequate fall clearance when working at height.
  - Never modify or alter your fall protection equipment. Only 3M or parties authorized in writing by 3M may make repairs to the equipment.
  - Prior to use of fall protection equipment, ensure a rescue plan is in place which allows for prompt rescue if a fall incident occurs.
  - If a fall incident occurs, immediately seek medical attention for the worker who has fallen.
  - Do not use a body belt for fall arrest applications. Use only a Full Body Harness.
  - Minimize swing falls by working as directly below the anchorage point as possible.
  - If training with this device, a secondary fall protection system must be utilized in a manner that does not expose the trainee to an unintended fall hazard.
  - Always wear appropriate personal protective equipment when installing, using, or inspecting the device/system.

☑ *Prior to installation and use of this equipment, record the product identification information from the ID label in the Inspection and Maintenance Log (Table 2) at the back of this manual.*

PRODUCT DESCRIPTION:

Figure 1 Illustrates the 3M™ DBI-SALA™ Fixed Beam Anchor. The Fixed Beam Anchor is a single point anchorage connector for a personal fall arrest system or personal fall restraint system designed to be attached to a beam. The Fixed Beam Anchor may be used as an end termination for 3M Fall Protection approved horizontal lifeline systems.

Figure 2 Illustrates components of the Fixed Beam Anchor. See Table 1 for Component Specifications. The Fixed Beam Anchor is comprised of a notched Support Tube (A) with a Fixed Hook End (D) and an Adjustable Hook End (E) that hook over the opposite eges of a beam flange. The Swiveling Connector Ring (B) serves as the tie-off point for a Lanyard or Self-Retracting Device (SRD), with a Pin (C) holding the Connector Ring in place. The Detent Pin (F) is used to lock the Adjustable Hook End. The Adjustment Handle (G) is used to tighten or loosen the Adjustable Hook End on the beam flange. A Bolt (H) and Nut (I) hold the Fixed Hook End together. The Key Ring (J) keeps the RFID Tag (K) and Labels (L) of the Fixed Beam Anchor.

Table 1 – Specifications

System Specifications:	
Capacity:	One person with a combined weight (clothing, tools, etc.) of no more than 310 lbs (140 kg) for ANSI, 420 lbs (191 kg) for OSHA.
Standards:	See Figure 1 for the applicable standards of each Fixed Beam Anchor model.
Anchorage/ Structure:	Structure must meet dimensional requirements from Figure 1. Anchorage strength must comply with Section 2.1 requirements.
Service Temperature	-40°F (-40°C) Minimum Service Temperature
Breaking Strength:	5,000 lbs (22.2 kN) Minimum Breaking Strength
Dimensions:	See Figure 1 for the dimensions of each Fixed Beam Anchor model.
Weight:	See Figure 1 for the weight of each Fixed Beam Anchor model.

Component Specifications:		
Figure 2 Reference	**Component**	**Materials**
A	Support Tube	Alloy steel
B	Swiveling Connector Ring	Alloy steel
C	Pin	Alloy steel
D	Fixed Hook End	Aluminum
E	Adjustable Hook End	Aluminum
F	Detent Pin	Stainless steel
G	Adjustment Handle	Aluminum
H	Bolt	Zinc plated steel
I	Nut	Zinc plated steel
J	Key Ring	Zinc plated steel
K	RFID Tag	Nylon
L	Labels	Vinyl

1.0 PRODUCT APPLICATION

1.1 PURPOSE: Anchorage Connectors are designed to provide anchorage connection points for Fall Arrest[1], Fall Restraint[2], Work Positioning[3], or Rescue[4] systems.

> ☑ ***Fall Protection Only:*** *This Anchorage Connector is for connection of Fall Protection Equipment. Do not connect Lifting Equipment to the Anchorage Connector.*

1.2 STANDARDS: Your Anchorage Connector conforms to the national or regional standard(s) identified on the front cover of these instructions. If this product is resold outside the original country of destination, the re-seller must provide these instructions in the language of the country in which the product will be used.

1.3 SUPERVISION: Use of this equipment must be supervised by a Competent Person[5].

1.4 TRAINING: This equipment must be installed and used by persons trained in its correct application. This manual is to be used as part of an employee training program as required by ANSI and OSHA, and/or regional regulations. It is the responsibility of the users and installers of this equipment to ensure they are familiar with these instructions, trained in the correct care and use of this equipment, and are aware of the operating characteristics, application limitations, and consequences of improper use of this equipment.

1.5 RESCUE PLAN: When using this equipment and connecting subsystem(s), the employer must have a rescue plan and the means at hand to implement and communicate that plan to users, authorized persons[6], and rescuers[7]. A trained, on-site rescue team is recommended. Team members should be provided with the equipment and techniques to perform a successful rescue. Training should be provided on a periodic basis to ensure rescuer proficiency.

1.6 INSPECTION FREQUENCY: The Anchorage Connector shall be inspected by the user before each use and, additionally, by a competent person other than the user at intervals of no longer than one year.[8] Inspection procedures are described in the *"Inspection and Maintenance Log"*. Results of each Competent Person inspection should be recorded on copies of the *"Inspection and Maintenance Log"*.

1.7 AFTER A FALL: If the Anchorage Connector is subjected to the forces of arresting a fall, it must be removed from service immediately, clearly marked "DO NOT USE", and then either destroyed or forwarded to 3M for replacement or repair.

2.0 SYSTEM REQUIREMENTS

2.1 ANCHORAGE: Anchorage structure requirements vary with the system application and whether it is a certified anchorage[9] or non-certified anchorage[10]. The structure to which a fall arrest, restraint, positioning, or rescue system is attached must sustain static loads applied in the directions permitted as shown in the following table. Anchorage Strength requirements, along with system applications, are specified below, unless noted or defined otherwise in Table 1:

Fall Protection System	Certified Anchorage[9]	Non-Certified Anchorage[10]	Defined by
Fall Arrest	2 times maximum arresting force	5,000 lbs (22.2 kN)	OSHA, ANSI
Restraint/Travel Restraint	2 times foreseeable force	1,000 lbs (4.4 kN) per ANSI 5,000 lbs (22.2 kN) per OSHA	OSHA, ANSI
Work Positioning	2 times foreseeable force	3,000 lbs (13.3 kN)	OSHA, ANSI
Rescue	5 times applied load	3,000 lbs (13.3 kN)	ANSI

When more than one system is attached to an anchorage, the strengths stated above must be multiplied by the number of systems attached to the anchorage. See ANSI Z359.2 for more information.

2.2 PERSONAL FALL ARREST SYSTEM: Figure 1 illustrates the application of this Anchorage Connector. Personal Fall Arrest Systems (PFAS) used with the system must meet applicable Fall Protection standards, codes, and requirements. The PFAS must incorporate a Full Body Harness and limit Arresting Force to the following values:

	Maximum Arresting Force	Free Fall
PFAS with Shock Absorbing Lanyard	1800 lbs (8 kN)	*Refer to the instruction(s) included with your Lanyard or SRD for Free Fall limitations.*
PFAS with Self Retracting Device (SRD)	1800 lbs (8 kN)	

2.3 FALL PATH AND SRD LOCKING SPEED: A clear path is required to assure positive locking of an SRD. Situations which do not allow for an unobstructed fall path should be avoided. Working in confined or cramped spaces may not allow the body to reach sufficient speed to cause the SRD to lock if a fall occurs. Working on slowly shifting material, such as sand or grain, may not allow enough speed buildup to cause the SRD to lock.

2.4 HAZARDS: Use of this equipment in areas with environmental hazards may require additional precautions to prevent injury to the user or damage to the equipment. Hazards may include, but are not limited to: heat, chemicals, corrosive environments, high voltage power lines, explosive or toxic gases, moving machinery, sharp edges, or overhead materials that may fall and contact the user or Personal Fall Arrest System.

2.5 FALL CLEARANCE: Figure 3 illustrates the components of a Fall Arrest. There must be sufficient Fall Clearance (FC) to arrest a fall before the user strikes the ground or other obstruction. Clearance is affected by a number of factors including: Anchorage Location, (A) Lanyard Length, (B) Lanyard Deceleration Distance or SRD Maximum Arrest Distance,

---

1 ***Fall Arrest System:*** *A collection of Fall Protection Equipment configured to arrest a free fall. Protects the user in the event of a fall. Free fall is permitted up to the limits allowed by the connecting device (either an Energy Absorbing Lanyard or Self-Retracting Device (SRD)).*

2 ***Restraint System:*** *A collection of Fall Protection Equipment configured to prevent the person's center of gravity from reaching a fall hazard.Prevents the user from reaching a hazard. No verical free fall is permitted.*

(C) Harness Stretch and D-Ring/Connector Length and Settling. Refer to the instructions included with your Fall Arrest subsystem for specifics regarding Fall Clearance calculation.

2.6 SWING FALLS: Swing Falls occur when the anchorage point is not directly above the point where a fall occurs (see Figure 4). The force of striking an object in a swing fall may cause serious injury or death. Minimize swing falls by working as directly below the anchorage point as possible. Do not permit a swing fall if injury could occur. Swing falls will significantly increase the clearance required when a Self-Retracting Device or other variable length connecting subsystem is used.

2.7 COMPONENT COMPATIBILITY: 3M equipment is designed for use with 3M approved components and subsystems only. Substitutions or replacements made with non-approved components or subsystems may jeopardize compatibility of equipment and may affect the safety and reliability of the complete system.

2.8 CONNECTOR COMPATIBILITY: Connectors are considered to be compatible with connecting elements when they have been designed to work together in such a way that their sizes and shapes do not cause their gate mechanisms to inadvertently open regardless of how they become oriented. Contact 3M if you have any questions about compatibility.

Connectors (hooks, carabiners, and D-rings) must be capable of supporting at least 5,000 lbs. (22.2 kN). Connectors must be compatible with the anchorage or other system components. Do not use equipment that is not compatible. Non-compatible connectors may unintentionally disengage (see Figure 5). Connectors must be compatible in size, shape, and strength. If the connecting element to which a snap hook or carabiner attaches is undersized or irregular in shape, a situation could occur where the connecting element applies a force to the gate of the snap hook or carabiner (A). This force may cause the gate to open (B), allowing the snap hook or carabiner to disengage from the connecting point (C).

Self-locking snap hooks and carabiners are required by ANSI Z359 and OSHA.

2.9 MAKING CONNECTIONS: Snap hooks and carabiners used with this equipment must be self-locking. Ensure all connections are compatible in size, shape and strength. Do not use equipment that is not compatible. Ensure all connectors are fully closed and locked.

3M connectors (snap hooks and carabiners) are designed to be used only as specified in each product's user's instructions. See Figure 6 for examples of inappropriate connections. Do not connect snap hooks and carabiners:

A. To a D-ring to which another connector is attached.

B. In a manner that would result in a load on the gate. Large throat snap hooks should not be connected to standard size D-rings or similar objects which will result in a load on the gate if the hook or D-ring twists or rotates, unless the snap hook complies is equipped with a 3,600 lb (16 kN) gate. Check the marking on your snap hook to verify that it is appropriate for your application.

C. In a false engagement, where features that protrude from the snap hook or carabiner catch on the anchor, and without visual confirmation seems to be fully engaged to the anchor point.

D. To each other.

E. Directly to webbing or rope lanyard or tie-back (unless the manufacturer's instructions for both the lanyard and connector specifically allows such a connection).

F. To any object which is shaped or dimensioned such that the snap hook or carabiner will not close and lock, or that roll-out could occur.

G. In a manner that does not allow the connector to align properly while under load.

3.0 INSTALLATION

> ☑ *Installation of non-certified anchor points must be performed or supervised by a Competent Person[1]. Installation of certified anchor points must be designed, certified, and supervised by a Qualified Person[2].*

3.1 PLANNING: Plan your fall protection system prior to installation of the Fixed Beam Anchor. Account for all factors that may affect your safety before, during and after a fall. Install in a location that meets the free fall and clearance requirements of the attached fall protections system. Consider all requirements, limitations and specifications defined in Section 2 and Table 1. Do not install on tapered beams that change in size along the length of the beam. Only install on beam profiles. Do not install on other structure profiles such as angle iron or pipes.

3.2 INSTALLING THE FIXED BEAM ANCHOR: The Fixed Beam Anchor can be installed on beams meeting the anchorage requirements specified in Table 1 and Section 2.1. See Figure 1 for the allowable Beam Flange Width (A) and Thickness (B) for each Fixed Beam Anchor model. The Fixed Beam Anchor can be Top Mounted (A), Bottom Mounted (B), or Side Mounted (C or D) on the beam (see Figure 7). Figure 8 shows the allowed load directions of the Fixed Beam Anchor. Do not install the anchor in a manner where the anchor could be loaded in a direction outside these ranges and never make additions to the fall protection equipment or system. Do not install or relocate the Fixed Beam Anchor in a manner not meeting the full requirements of this instruction. To install the Fixed Beam Anchor, follow steps 1-4 and see Figure 9.

1. Remove the detent pin and fully open the adjustable beam hook by turning the adjustment handle counter-clockwise.
2. Position the Fixed Beam Anchor on the beam flange in the desired position (top, bottom, side). Place the fixed beam hook against one side of the beam flange. Slide the adjustable beam hook against the opposite side of the beam flange.

   > ☑ *Fasteners or other obstructions may prevent the Fixed Beam Anchor from properly securing to the beam. Move the Fixed Beam Anchor to another location if obstructions interfere with installation.*

3. Hold the adjustment handle parallel with the support tube. Turn the adjustment handle to align the hole in the adjustment block with the nearest hole in the support tube. Insert the detent pin through the adjustment block and the support tube, ensuring the pin is locked into place. To secure the Fixed Beam Anchor onto the flange, pivot the adjustment handle away from the support tube and turn the adjustment handle clockwise in half turns. Ensure the beam hooks are tight against both sides of the flange. Hand tighten only.
4. Ensure the adjustment pin still has sufficient travel after tightening the Fixed Beam Anchor. See figure 9. If the adjustment pin has bottomed out, reinstall the Fixed Beam Anchor using the next closest hole to the beam flange to allow travel for the adjustment pin. Following installation, the Fixed Beam Anchor must be solid and securely attached to the structure without any looseness.

4.0 USE

4.1 BEFORE EACH USE: Verify that your work area and Personal Fall Arrest System (PFAS) meet all criteria defined in Section 2 and a formal Rescue Plan is in place. Inspect the Fixed Beam Anchor per the '*User*' inspection points defined on the "*Inspection and Maintenance Log*" (Table 2). If inspection reveals an unsafe or defective condition, do not use the system. Remove the system from service and destroy, or contact 3M regarding replacement or repair.

4.2 FALL ARREST CONNECTIONS: The Fixed Beam Anchor is used with a Full Body Harness and Energy Absorbing Lanyard or Self-Retracting Device (SRD). Figure 10 illustrates connection of the Energy Absorbing Lanyard (A) or SRD (B) between the Harness and Fixed Beam Anchor. Connect the Energy-Absorbing Lanyard or SRD between the D-Ring on the Fixed Beam Anchor and the back Dorsal D-Ring on the Harness as instructed in the instructions included with the Energy Absorbing Lanyard or SRD. Only one fall protection system or positioning system may be attached to an individual connection point.

4.3 HORIZONTAL SYSTEMS: Select Anchorage Connectors can be used as end anchor points for horizontal systems. Anchorages for horizontal systems must be designed and certified by a Qualified Person with experience and training in designing and using horizontal lifeline systems. Non-certified anchorages shall not be used for horizontal lifelines. Only use an anchorage connector that meets the load, moment, and directional requirements for that specified horizontal system. Non-Fixed, Sliding, or Counterweight Anchorage Connectors should not be used with a horizontal system. Refer to the instruction manual and installation manual supplied with your horizontal lifeline system for more information on anchorage and anchorage connector requirements.

5.0 INSPECTION

5.1 INSPECTION FREQUENCY: The Fixed Beam Anchor must be inspected at the intervals defined in Section 1. Inspection procedures are described in the *"Inspection and Maintenance Log" (Table 2)*. Inspect all other components of the Fall Protection System per the frequencies and procedures defined in the manufacturer's instructions.

> ☑ *Extreme working conditions (harsh environments, prolonged use, etc.) may require increasing the frequency of inspections.*

> ☑ *Fixed Beam Anchors are equipped with a Radio Frequency Identification (RFID) Tag. The RFID Tag can be used in conjunction with a Handheld Reading Device to simplify inspection and inventory control and provide records for your fall protection equipment.*

1 ***Competent Person:*** *One who is capable of identifying existing and predictable hazards in the surroundings or working conditions which are unsanitary, hazardous, or dangerous to employees, and who has authorization to take prompt corrective measures to eliminate them.*

2 ***Qualified Person:*** *An individual with a recognized degree or professional certificate, and extensive experience in Fall Protection. This individual must be capable of design, analysis, and specification in Fall Protection.*

5.2 **ANNUALLY:** The Fixed Beam Anchor must be formally inspected by a competent person[3] other than the user at least annually. Record the results on the inspection label, in an inspection log, or use the i-Safe inspection web portal to maintain inspection records.

5.3 **DEFECTS:** If inspection reveals an unsafe or defective condition, remove the Fixed Beam Anchor from service immediately and destroy it, or contact 3M regarding replacement or repair.

> ☑ ***Authorized Repairs Only:*** *Only 3M or parties authorized in writing my make repairs to this equipment.*

5.4 **PRODUCT LIFE:** The functional life of the Fall Arrest System is determined by work conditions and maintenance. As long as the product passes inspection criteria, it may remain in service.

6.0 MAINTENANCE, SERVICING, STORAGE

6.1 **CLEANING:** Periodically clean the Fixed Beam Anchor's metal components with a soft brush, warm water, and a mild soap solution. Ensure parts are thoroughly rinsed with clean water.

6.2 **SERVICE:** Only 3M or parties authorized in writing by 3M may make repairs to this equipment. If the Fixed Beam Anchor has been subject to fall force, it must be removed from service immediately, clearly marked "DO NOT USE", and then destroyed. If inspection reveals unsafe or defective conditions, remove the system from service and contact 3M regarding replacement or repair.

6.3 **STORAGE AND TRANSPORT:** When not in use, store and transport the Fixed Beam Anchor and associated fall protection equipment in a cool, dry, clean environment out of direct sunlight. Avoid areas where chemical vapors may exist. Thoroughly inspect components after extended storage.

7.0 LABELS

Figure 11 illustrates labels on the Fixed Beam Anchor. Labels must be replaced if they are not fully legible.

Table 2 – Inspection and Maintenance Log

Inspection Date:	**Inspected By:**		
Components:	**Inspection:** (See Section 1 for *Inspection Frequency*)	**User**	**Competent Person**[1]
Fixed Beam Anchor (Figure 2)	Inspect the Fixed Beam Anchor damage: Look for cracks, dents, or deformities.	☐	☐
	Inspect for bending or wear on the Support Bar (A), Swiveling Connector Ring (B), Connector Ring Bracket, Fixed Hook End (C), Detent Pin (D), Adjustable Hook End (E), and Adjustment Handle (F). The Adjustment Handle must rotate smoothly.	☐	☐
	Inspect for any missing or damaged parts (Bolts, Nuts, Rivets, Pins).	☐	☐
	Inspect the entire unit for corrosion.	☐	☐
	Inspect the Detent Pin (D). Ensure that the Detent Pin will fully engage the adjustment holes and that it locks in place. Ensure that both detent balls are present.	☐	☐
	If attaching to an already installed fixed beam anchor, verify the anchor was installed per the requirements of this instruction to a structure meeting the requirements in Table 1. If unsure, remove the fixed beam anchor and reinstall per the requirements from this instruction.	☐	☐
Labels (Figure 11)	Verify that all labels are present, securely attached and are legible (see *'Labels'*)	☐	☐
PFAS and Other Equipment	Additional Personal Fall Arrest System (PFAS) equipment (harness, SRL, etc) that are used with the Anchorage System should be installed and inspected per the manufacturer's instructions.	☐	☐
Structure	Verify the structure to which the anchor is attached meets the strength requirements from Table 1 in all possible directions of loading. The structure must be free of any damage.	☐	☐

Serial Number(s):	**Date Purchased:**
Model Number:	**Date of First Use:**

Corrective Action/Maintenance:	Approved By:
	Date:
Corrective Action/Maintenance:	Approved By:
	Date:
Corrective Action/Maintenance:	Approved By:
	Date:
Corrective Action/Maintenance:	Approved By:
	Date:
Corrective Action/Maintenance:	Approved By:
	Date:
Corrective Action/Maintenance:	Approved By:
	Date:
Corrective Action/Maintenance:	Approved By:
	Date:
Corrective Action/Maintenance:	Approved By:
	Date:
Corrective Action/Maintenance:	Approved By:
	Date:
Corrective Action/Maintenance:	Approved By:
	Date:
Corrective Action/Maintenance:	Approved By:
	Date:
Corrective Action/Maintenance:	Approved By:
	Date:
Corrective Action/Maintenance:	Approved By:
	Date:
Corrective Action/Maintenance:	Approved By:
	Date:

---

[1] ***Competent Person:*** *One who is capable of identifying existing and predictable hazards in the surroundings or working conditions which are unsanitary, hazardous, or dangerous to employees, and who has authorization to take prompt corrective measures to eliminate them.*

GLOBAL PRODUCT WARRANTY, LIMITED REMEDY AND LIMITATION OF LIABILITY

WARRANTY: THE FOLLOWING IS MADE IN LIEU OF ALL WARRANTIES OR CONDITIONS, EXPRESS OR IMPLIED, INCLUDING THE IMPLIED WARRANTIES OR CONDITIONS OF MERCHANTABILITY OR FITNESS FOR A PARTICULAR PURPOSE.

Unless otherwise provided by local laws, 3M fall protection products are warranted against factory defects in workmanship and materials for a period of one year from the date of installation or first use by the original owner.

LIMITED REMEDY: Upon written notice to 3M, 3M will repair or replace any product determined by 3M to have a factory defect in workmanship or materials. 3M reserves the right to require product be returned to its facility for evaluation of warranty claims. This warranty does not cover product damage due to wear, abuse, misuse, damage in transit, failure to maintain the product or other damage beyond 3M's control. 3M will be the sole judge of product condition and warranty options.

This warranty applies only to the original purchaser and is the only warranty applicable to 3M's fall protection products. Please contact 3M's customer service department in your region for assistance.

LIMITATION OF LIABILITY: TO THE EXTENT PERMITTED BY LOCAL LAWS, 3M IS NOT LIABLE FOR ANY INDIRECT, INCIDENTAL, SPECIAL OR CONSEQUENTIAL DAMAGES INCLUDING, BUT NOT LIMITED TO LOSS OF PROFITS, IN ANY WAY RELATED TO THE PRODUCTS REGARDLESS OF THE LEGAL THEORY ASSERTED.

GARANTIE INTERNATIONALE DU PRODUIT, RECOURS LIMITÉ ET LIMITATION DE RESPONSABILITÉ

GARANTIE : CE QUI SUIT REMPLACE TOUTES LES GARANTIES OU CONDITIONS, EXPRESSES OU IMPLICITES, Y COMPRIS LES GARANTIES OU LES CONDITIONS IMPLICITES RELATIVES À LA QUALITÉ MARCHANDE ET À L'ADAPTATION À UN USAGE PARTICULIER.

Sauf disposition contraire de la loi, les produits de protection antichute 3M sont garantis contre tout défaut de fabrication en usine et de matériaux pour une période d'un (1) an à compter de la date d'installation ou de la première utilisation par le propriétaire initial.

RECOURS LIMITÉ : Moyennant un avis écrit à 3M, 3M réparera ou remplacera tout produit présentant un défaut de fabrication en usine ou de matériaux, tel que déterminé par 3M. 3M se réserve le droit d'exiger le retour du produit dans ses installations afin d'évaluer la réclamation de garantie. Cette garantie ne couvre pas les dommages au produit résultant de l'usure, d'un abus ou d'une mauvaise utilisation, les dommages subis pendant l'expédition, le manque d'entretien du produit ou d'autres dommages en dehors du contrôle de 3M. 3M jugera seul de l'état du produit et des options de garantie.

Cette garantie s'applique uniquement à l'acheteur initial et est la seule garantie applicable aux produits de protection antichute de 3M. Veuillez communiquer avec le service à la clientèle de 3M de votre région pour obtenir de l'aide.

LIMITATION DE RESPONSABILITÉ : DANS LES LIMITES PRÉVUES PAR LES LOIS LOCALES, 3M NE SERA TENU POUR RESPONSABLE DE TOUT DOMMAGE INDIRECT, ACCESSOIRE, SPÉCIFIQUE OU CONSÉCUTIF INCLUANT, SANS S'Y LIMITER, LA PERTE DE PROFIT, LIÉS DE QUELQUE MANIÈRE AUX PRODUITS, QUELLE QUE SOIT LA THÉORIE LÉGALE INVOQUÉE.

3M | DBI SALA® PROTECTA®
Fall Protection

Distributed by Engineered Fall Protection
Sales@EngineeredFallProtection.com
www.EngineeredFallProtection.com
Tel: (314) 492-4422

ISO 9001

bsi. ISO 9001 Quality Management FM534873

EU DECLARATION OF CONFORMITY:
3M.com/FallProtection/DOC